DESIGN CRITERIA

D-1. DESIGN CODES
1. BUILDING CODE .... IBC 2018
2. STEEL CODE .... AISC 14th Edition
3. CONCRETE CODE .... ACI 318-05
4. MASONRY CODE .... ACI 530-05
5. WOOD CODE .... NDS 2005

D-2. DESIGN STRESSES
1. STEEL STRESSES
a. WIDE-FLANGE SHAPES..................... ASTM A992
b. HSS SHAPES..................... ASTM A500, GRADE B
c. STEEL PIPE..................... ASTM A53, GRADE B
d. OTHER STEEL SHAPES..................... ASTM A36
e. DEFORMED BARS..................... ASTM A615, 60,000 PSI
f. WELDED WIRE FABRIC..................... ASTM 185
g. SHEAR STUDS..................... ASTM A108
h. ANCHOR RODS..................... ASTM F1554, GRADE 36
i. BOLTS..................... ASTM A325
j. WASHERS..................... ASTM F436
2. CONCRETE STRESSES
a. FOOTINGS .... 3,000 PSI
b. SLABS AND WALLS .... 4,000 PSI
3. WOOD
a. S4S SPF #2 OR BETTER
b. LVL VERSA-LAM 2.1E-3100FB

D-3. DESIGN LOADS
1. FLOOR LIVE LOADS
a. PUBLIC ROOMS..................... 100 PSF
2. ROOF SNOW LOADS
a. GROUND SNOW LOAD (Pg)..................... 40 PSF
b. ROOF LIVE LOAD .... 20 PSF
c. FLAT ROOF SNOW LOAD (Pf)..................... 40 PSF
d. SNOW LOAD IMPORTANCE FACTOR (IS) 1.0
e. SNOW EXPOSURE FACTOR (Ce) 0.9
f. THERMAL FACTOR (Ct) 1.0
3. SOILS
a. BEARING PRESSURE .... 2,000 PSF

01.00 GENERAL NOTES

1. MEANS, METHODS, PROCEDURES, AND SEQUENCES OF CONSTRUCTION ARE THE RESPONSIBILITY OF THE CONTRACTOR.

2. CONSTRUCTION LOADS SHALL NOT OVERLOAD STRUCTURE NOR SHALL THEY BE IN EXCESS OF DESIGN LOADS INDICATED ON DRAWINGS.

3. JOB SITE SAFETY INCLUDING ALL OSHA REGULATIONS IS THE RESPONSIBILITY OF THE CONTRACTOR.

4. TEMPORARY BRACING, SHEETING, SHORING, AND ANY OTHER ITEMS REQUIRED TO ENSURE THE STRUCTURAL INTEGRITY OF THE NEW AND ANY EXISTING STRUCTURES, SIDEWALKS, UTILITIES, ANY OTHER ITEMS DURING CONSTRUCTION IS THE RESPONSIBILITY OF THE CONTRACTOR.

5. CONTRACTOR WILL FURNISH SUB-CONTRACTORS WITH ANY ADDITIONAL DRAWINGS NEEDED TO COMPLETE STRUCTURAL WORK.

6. SEE THE ARCHITECTURAL, MECHANICAL, ELECTRICAL, PLUMBING, AND SITE DRAWINGS FOR DIMENSIONS AND DETAILS REQUIRED FOR RELATED WORK, NOT SHOWN ON THE STRUCTURAL DRAWINGS.

7. STRUCTURAL DRAWINGS ARE NOT STAND-ALONE DOCUMENTS. CONTRACTORS SHALL COORDINATE STRUCTURAL, ARCHITECTURAL, CIVIL, MECHANICAL, ELECTRICAL, AND PLUMBING DRAWINGS AND OTHER DISCIPLINES AND INCORPORATE ALL REQUIREMENTS INTO SHOP DRAWINGS AND FIELD WORK.

8. CONTRACTOR SHALL NOTIFY THE ARCHITECT/ENGINEER OF ANY DISCREPANCIES FOUND BETWEEN THE CONTRACT DOCUMENTS AND EXISTING CONDITIONS AND IS RESPONSIBLE TO COORDINATE ALL EXISTING CONDITIONS WITH NEW WORK.

9. CONTRACTOR SHALL NOTIFY THE ARCHITECT/ENGINEER OF ANY DISCREPANCIES FOUND BETWEEN STRUCTURAL DRAWINGS AND THE DRAWINGS OR REQUIREMENTS OF ANY OTHER DISCIPLINE , THE GENERAL STRUCTURAL NOTES, SPECIFICATIONS, AND OTHER DRAWINGS. THE ARCHITECT/ENGINEER WILL DETERMINE WHICH REQUIREMENT WILL GOVERN.

10. CONTRACTOR IS RESPONSIBLE FOR COORDINATING DIMENSIONS AND INSTALLATION DETAILS OF PURCHASED EQUIPMENT WITH THE SUPPORTING STRUCTURE. CONTRACTOR SHALL NOTIFY THE ENGINEER OF ANY DISCREPANCIES BETWEEN THESE ITEMS AND THE STRUCTURE.

11. DETAILS DESIGNATED AS "TYPICAL DETAILS" APPLY GENERALLY TO THE DRAWINGS IN AREAS WHERE CONDITIONS ARE SIMILAR TO THOSE SHOWN IN THE DETAILS. CONTACT ENGINEER FOR INTERPRETATION OF THE APPLICABILITY OF TYPICAL DETAILS.

12. CRITERIA OUTLINED IN THE GEOTECHNICAL REPORT SUPERCEDES CRITERIA OUTLINED IN THE CONTRACT DOCUMENTS.

13. THE CONTRACTOR SHALL BE RESPONSIBLE TO REVIEW ALL EXISTING JOB CONDITIONS. ANY ADVERSE EXISTING CONDITIONS AFFECTING WORK SHOWN ON THESE DRAWINGS SHALL BE BROUGHT TO THE ATTENTION OF THE ARCHITECT/ENGINEER FOR POSSIBLE CLARIFICATION OF RECONCILIATION.

03.21 CONCRETE REINFORCEMENT

1. TERMINATE ALL BARS IN ACCORDANCE WITH ACI 318 CODE LATEST ISSUE, WITH A HOOK IF THE REQUIRED EMBEDMENT LENGTH CANNOT BE OBTAINED.

2. REINFORCING SHOWN IN SECTIONS OF STRUCTURAL DRAWINGS OF BEAMS, SLABS, WALLS, ETC. IS TO BE CONTINUOUS AND TYPICAL, UNLESS OTHERWISE NOTED.

3. CONCRETE PROTECTION FOR REINFORCING STEEL:
A. FOOTINGS: COVERAGE OF 3" FOR BOTTOM AND SIDES
B. PIERS: COVERAGE OF 1-1/2" FOR TIES
C. WALLS: COVERAGE OF 3/4" ON INSIDE FACE COVERAGE OF 2" ON OUTSIDE FACE FOR #6 BARS AND LARGER COVERAGE OF 1-1/2" ON OUTSIDE FACE FOR #5 BARS AND SMALLER

03.31 CAST-IN-PLACE STRUCTURAL CONCRETE

1. PIPES OR CONDUITS PLACED IN SLABS SHALL NOT HAVE AN OUTSIDE DIAMETER LARGER THAN 1/3 THE SLAB THICKNESS AND SHALL NOT BE SPACED CLOSER THAN 3 DIAMETERS ON CENTER. ALUMINUM CONDUITS SHALL NOT BE PLACED IN CONCRETE.

2. ALL SLABS ON GRADE ARE TO BE 4" THICK WITH 4" COMPACTED #57 STONE BASE AND BE REINFORCED WITH 6 X6-W2.1 XW2.1 (6X6-8/8) WELDED MESH, UNLESS NOTED OTHERWISE. SPLICES PER CRSI, LATEST EDITION.

3. SEE THE ARCHITECTURAL DRAWINGS FOR THE EXACT LOCATION AND EXTENT OF SLABS

4. PROVIDE ALL OPENINGS IN FLOOR FOR OTHER TRADES. OPENINGS 1'-0" IN THE LONGEST DIMENSION ARE TO HAVE (1) #4 BAR X 2'-0" DIAGONALLY AT THE CORNERS.

5. WHERE BEAMS ARE SHOWN WITHOUT BEARING PLATES, SET BEAMS ON GROUT TO THE PROPER ELEVATION.

6. FILL ALL COLUMN AND BEAM POCKETS WITH CONCRETE OR MASONRY AFTER ALL COLUMNS AND BEAMS ARE IN PLACE.

7. CONSTRUCTION JOINTS IN BEAMS, SLABS, AND WALLS USED AS BEAMS, ARE TO BE NEAR THE CENTER OF SPAN.

8. REINFORCED CONCRETE BEAMS ARE TO HAVE 8" MINIMUM BEARING

9. CONCRETE WALL CONSTRUCTION JOINTS ARE TO BE 60'-0" OC MAXIMUM, UNO.

10. ALL WALLS THAT SUPPORT STRUCTURAL SLABS ARE TO HAVE #4 DOWELS 5'-0" LONG AT 12" OC THAT EXTEND 2'-6" INTO TOP OF WALL, UNO.

11. CONCRETE WALLS ARE TO HAVE CORNER BARS THE SAME AS HORIZONTAL WALL REINFORCING, INCLUDING TOP AND BOTTOM BARS, TYPICAL AT ALL CORNERS AND INTERSECTIONS, MINIMUM #4 @ 12" OC, 6'-0" LONG.

12. PROVIDE (1) #5 BAR AROUND ALL OPENINGS IN CONCRETE WALLS, BOTH FACES, DIAGONALLY AT EACH CORNER (TOTAL OF 8).

13. CONCRETE SLAB ON GRADE JOINTS
1. CONTRACTION JOINTS
a. ARE TO BE 1/4 THICKNESS OF THE SLAB WITH A MINIMUM OF 1" DEEP.
b. PREFORMED PLASTIC OR HARDBOARD STRIPS ARE ACCEPTABLE.
c. EARLY ENTRY DRY-CUT JOINTS MUST BE COMPLETED 1 TO 4 HOURS AFTER FINISHING.
d. CONVENTIONAL SAW CUTS ARE TO BE COMPLETED 4 TO 12 HOURS AFTER FINISHING.
e. REINFORCING TO CONTINUE THROUGH JOINT.
2. JOINT SPACING
a. MAXIMUM JOINT SPACING TO BE 24 TO 30 TIMES THE SLAB THICKNESS WITH A MAXIMUM SPACING OF 15'.
b. ALL PANELS SHOULD BE NEAR SQUARE. LENGTH TO WIDTH RATIO NOT TO EXCEED 1.5.
3. CONSTRUCTION JOINTS
a. KEY THE TWO SIDES OF THE JOINT TOGETHER.
b. USE PREFORMED BITUMINOUS OR METAL STRIPS.
4. GENERAL
a. GC TO PROVIDE PLAN OF JOINT LOCATIONS.
b. COORDINATE JOINT LOCATIONS WITH FLOOR FINISHES.
c. PROVIDE AND INSTALL JOINT FILLER OR PATCH AS REQUIRED.
d. SEE ARCHITECTURAL DRAWINGS FOR OTHER JOINT REQUIREMENTS.
e. SPECIFICATIONS MAY CONTAIN FURTHER INFORMATION AND OVERRULE THESE NOTES.

03.60 GROUTING

1. PROVIDE NON-SHRINK, NON-METALLIC PRE-MIXED GROUT UNDER ALL COLUMN BASE PLATES AND BEAM BEARING PLATES. GROUT SHALL HAVE A 7 DAY COMPRESSIVE STRENGTH OF 6,000 PSI.

04.20 UNIT MASONRY

1. CONCRETE BLOCK WALLS SUBJECT TO EARTH PRESSURE SHALL BE DOWELED TO FOOTINGS WITH #3 BARS @ 16" OC, EMBEDDED 6" MINIMUM IN FOOTING AND PROJECTING 2 COURSES INTO THE BLOCK. THE BLOCK CELLS ARE TO BE GROUTED WHERE THE DOWELS OCCUR.

2. PROVIDE ALL REINFORCED BLOCK WALLS WITH VERTICAL REINFORCING AS NOTED AND CONTINUOUS BOND BEAMS AT BEARING ELEVATIONS. REINFORCE BOND BEAMS WITH 1 #5 BAR, CONTINUOUS, UNO.
A. VERTICAL REINFORCING:
a. INTERIOR WALLS: 1 #5 @ 48" OC
b. EXTERIOR WALLS: 1 #5 @ 24" OC

3. GROUT CELLS FULL WHERE REINFORCING OCCURS. REINFORCING TO EXTEND FROM FOUNDATION TO TOP OF WALL.

4. SPECIFIED COMPRESSIVE STRENGTH OF MASONRY, F'M, SHALL BE MINIMUM 1,500 PSI. HOLLOW AND SOLID CONCRETE BLOCK USED IN WALLS SHALL CONFORM TO ASTM C-90.

5. MORTAR FOR MASONRY SHALL CONFORM TO ASTM C270, TYPE M OR S. MINIMUM COMPRESSIVE STRENGTH OF MORTAR SHALL BE 2,500 PSI FOR TYPE M MORTAR AND 1,800 PSI FOR TYPE S MORTAR.

6. PROVIDE TYPE S MORTAR FOR ALL MASONRY WORK EXCEPT PROVIDE TYPE M MORTAR FOR MASONRY IN CONTACT WITH EARTH.

7. GROUT FOR MASONRY SHALL CONFORM TO ASTM C476. MINIMUM COMPRESSIVE STRENGTH OF GROUT SHALL BE 2,500 PSI.

8. ALL VERTICAL REINFORCING IN MASONRY WALLS SHALL BE GROUTED SOLID FULL HEIGHT INTO CENTERS OF CELLS OF UNITS WITH CEMENT GROUT.

9. PROVIDE CONTINUOUS HORIZONTAL JOINT REINFORCING "DUR-O-WALL" OR EQUIVALENT SPACED AT 16" O.C. MAXIMUM VERTICALLY IN ALL MASONRY WALLS.

10. MASONRY JOINT REINFORCEMENT:
A. INTERIOR WALLS: MILL- GALVANIZED, CARBON STEEL.
B. EXTERIOR WALLS: HOT-DIP GALVANIZED, CARBON STEEL.
C. WIRE SIZE FOR SIDE RODS: 0.148-INCH DIAMETER.
D. WIRE SIZE FOR CROSS RODS: 0.148-INCH DIAMETER.
E. WIRE SIZE FOR VENEER TIES: 0.148-INCH DIAMETER.
F. SPACING OF CROSS RODS, TABS, AND CROSS TIES: NOT MORE THAN 16 INCHES O.C.
G. PROVIDE IN LENGTHS OF NOT LESS THAN 10 FEET, WITH PREFABRICATED CORNER AND TEE UNITS.

11. VERTICAL SPACING TO BE 16" O.C.

12. WHERE WALLS ABUT EACH OTHER AND AT OUTSIDE CORNERS, PROVIDE PREFABRICATED TEE-TYPE AND CORNER TRUSS TIES. DISCONTINUE JOINT REINFORCING AT CONTROL JOINTS.

13. PROVIDE VERTICAL CONTROL JOINTS IN MASONRY WALLS AS PER ARCHITECTURAL DRAWINGS.

14. ALL MASONRY ANCHORS, HEADED STUDS, EPOXY/ADHESIVE ANCHORS, EXPANSION ANCHORS, AND OTHER ITEMS CONNECTED TO OR EMBEDDED IN MASONRY AS SPECIFIED ON THE DRAWINGS SHALL BE CONNECTED TO OR EMBEDDED IN GROUTED SOLID MASONRY CELLS.

05.12 STRUCTURAL STEEL FRAMING

1. FOR ALL DESIGN AND FABRICATION, THE STRUCTURAL STEEL WORK SHALL BE IN ACCORDANCE WITH THE "SPECIFICATION FOR STRUCTURAL STEEL BUILDINGS," AISC 360-05.

2. BEAMS AND GIRDERS SHALL HAVE BEAM WEB HOLES AS INDICATED ON THE STRUCTURAL DRAWINGS. ALL HOLES SHALL BE CENTERED AT MID-DEPTH OF THE BEAM, U.N.O. ALL RECTANGULAR WEB HOLES SHALL HAVE A MINIMUM CORNER RADIUS 0F 5/8 INCH OR TWICE THE THICKNESS OF THE BEAM WEB, WHICHEVER IS GREATER. ALL WEB OPENINGS SHALL BE MACHINE OXYGEN CUT; MANUAL CUTTING OR BURNING IS NOT PERMITTED. COORDINATE LOCATION AND SIZE OF WEB HOLE WITH MECHANICAL CONTRACTOR, SUBJECT TO REVIEW BY THE STRUCTURAL EOR.

3. ASD HAS BEEN USED FOR THE THE DESIGN OF THE STRUCTURE. THE NUMBER SHOWN AT THE END OF THE BEAM IS THE REACTION IN KIPS. IF NO NUMBER IS SHOWN, THEN THE REACTION IS TO BE 15 KIPS.

4. THE NUMBERS SHOWN THUS [#] ADJACENT TO THE BEAM REACTION ON THE PLANS INDICATE THE MAGNITUDE OF MOMENT DUE TO LATERAL FORCES. THIS VALUE IS TO BE USED TO DESIGN THE FLEXIBLE MOMENT CONNECTION.

5. THE NUMBERS SHOWN THUS < > ADJACENT TO THE BEAM DESIGNATION ON THE PLANS INDICATE THE NUMBER OF 3/4" DIAMETER HEADED SHEAR CONNECTORS, EQUALLY SPACED ALONG THE TOP FLANGE OF THE BEAM. STUDS ARE TO BE 1" BELOW TOP OF SLAB.

6. THE TOP OF STEEL ELEVATION IS MEASURED (+ OR -) FROM THE REFERENCE ELEVATION.

7. PROVIDE 3/16" THICK CLOSURE PLATES ON ALL TUBE AND PIPE COLUMNS, UNLESS OTHERWISE NOTED.

8. PROVIDE SLOTS OR SHIMS FOR VERTICAL AND HORIZONTAL ADJUSTMENTS ON ALL CORNICE ANGLES, RELIEF ANGLES, HUNG LINTELS AND DIAGONAL BRACES, WELD IN FINAL POSITION.

9. ALL TUBE BEAMS ARE TO HAVE TOP AND BOTTOM CLIPS TO PREVENT ROTATION IN ADDITION TO SHEAR CONNECTION, MINIMUM 3 X 3 X 5/16" TOP AND BOTTOM CLIPS MAY BE DESIGNED FOR ROTATION AND SHEAR. HOLD ENDS OF ANGLES BACK 1" FROM FINISHED SURFACES.

10. THE GENERAL CONTRACTOR IS TO PROVIDE ADDITIONAL STEEL AS REQUIRED FOR BASKETBALL BACKSTOP INSTALLATION; SIZES TO BE DETERMINED BY BACKSTOP SUPPLIER.

11. THE GENERAL CONTRACTOR IS TO PROVIDE AND COORDINATE DRILLING PATTERN FOR FOLDING PARTITION HANGERS TO STEEL FABRICATOR.

06.11 ROUGH CARPENTRY

1. ALL STUD WALLS SHOWN ON STRUCTURAL DRAWINGS SHALL HAVE 2x4 STUDS PLACED AT 16" OC, EXCEPT WHERE SHOWN OTHERWISE.

2. TOP PLATES SHALL BE DOUBLED ON ALL STUD WALLS.

3. CRIPPLES UNDER HEADERS SHALL BE CONTINUOUS TO SOLE PLATE.

4. BLOCK ALL STUD WALLS AS REQUIRED FOR SHEATHING.

5. ALL WOOD IN CONTACT WITH CONCRETE, MASONRY, OR SOIL SHALL BE PRESSURE TREATED.

6. BEAMS, GIRDERS, AND JOISTS SHALL NOT BE NOTCHED, UNLESS NOTED OTHERWISE.

7. JOISTS, RAFTERS, AND DECKING SHALL NOT BE CUT AND HEADED OR DISPLACED TO PROVIDE FOR OPENINGS IN ROOFS OR FLOORS, EXCEPT AS DETAILED ON DRAWINGS.

8. INSTALL ALL HORIZONTAL MEMBERS WITH CROWN UP.

9. ALL MEMBERS IN BEARING SHALL BE ACCURATELY CUT AND ALIGNED SO THAT FULL BEARING IS PROVIDED WITHOUT THE USE OF SHIMS. BEARING POSTS SHALL HAVE FULL BLOCKING OF SUPPORT UNDER.

10. ALL JOISTS SHALL HAVE A MINIMUM OF 2" BEARING AT SUPPORTS. LAPPING JOISTS SHALL HAVE 6" LAPS CENTERED OVER INTERIOR SUPPORTS.

11. LEDGERS AND STUD WALL FOUNDATION SILL PLATES, AND OTHER PLATES FASTENED TO CONCRETE OR MASONRY, SHALL BE BOLTED TO CONCRETE WITH ANCHOR BOLTS OF SIZE AND MINIMUM SPACING AS SHOWN ON DRAWINGS. AT LEAST TWO BOLTS SHALL BE PROVIDED FOR EACH PIECE WITH ONE BOLT WITHIN 12" OF EACH END.

12. PLACE A SINGLE PLATE AT THE BOTTOM AND A DOUBLE PLATE AT THE TOP OF ALL STUD WALLS. SILL PLATES SHALL BE BOLTED TO FOUNDATION BEAM WITH 1/2" DIAMETER ANCHOR BOLTS EMBEDDED SEVEN INCHES MINIMUM AT A MAXIMUM SPACING OF 48" OC. PROVIDE A MINIMUM OF TWO BOLTS PER PIECE WITH ONE BOLT LOCATED NOT MORE THAN 12" OR LESS THAN 4" FROM EACH END OF PIECE. ANCHOR BOLTS SHALL BE HOT DIPPED GALVANIZED PER ASTM A653, G185.

13. STUDS SHALL BE DOUBLED AT ALL ANGLES, CORNERS AND AROUND ALL OPENINGS.

14. PROVIDE FRAMING AND BLOCKING TO SUPPORT ALL EDGES OF OPENINGS IN THE PLYWOOD ROOF DECK.

15. UNLESS OTHERWISE NOTED, ALL TIMBER CONNECTIONS SHALL BE NAILED IN CONFORMANCE WITH THE INTERNATIONAL BUILDING CODE, TABLE 2304.9.1.

16. FOR BEAMS AND GIRDERS PERPENDICULAR TO WALLS, PROVIDE ONE STUD FOR EACH 1 1/2" OF BEAM WIDTH. STUD PACKS/COLUMNS SHALL BE CONTINUOUS TO FOUNDATION, INCLUDING WITHIN FLOOR TRUSS SPACE.

17. WOOD JOIST SUPPLIER TO VERIFY CAPACITY OF WOOD MEMBERS AND HANGERS TO BE USED.

06.16 SHEATHING

1. PLYWOOD SHEATHING AND SUBFLOOR NAILING
A. ROOF PLYWOOD: 8d COMMON AT 6" OC AT ALL SUPPORTED EDGES AND AT 12" OC AT INTERIOR SUPPORT.
B. FLOOR PLYWOOD: 8d COMMON AT 6" OC AT ALL SUPPORTED EDGES AND AT 10" OC AT INTERIOR SUPPORTS.
C. WALL PLYWOOD SHEATHING DIRECT TO FRAMING: 8d COMMON AT 6" OC ALL PANEL EDGES AND AT 10" OC AT ALL INTERIOR STUDS.

2. BEFORE EACH PANEL IS PLACED, A LINE OF GLUE SHALL BE APPLIED TO THE JOISTS WITH A CAULKING GUN. THE PANEL T&G JOINT SHALL ALSO BE GLUED, ALTHOUGH LESS HEAVILY TO AVOID SQUEEZE-OUT.

3. ALL WOOD STRUCTURE PANEL DIAPHRAGMS AT WALLS, ROOFS AND FLOORS SHALL BE APA RATED SHEETING. ALL PLYWOOD SHALL HAVE AT LEAST 5-PLIES. ALL PANEL EDGES ARE TO BE BLOCKED USING 2 x 4 FLAT. PLACE PANELS WITH STRENGTH DIRECTION PERPENDICULAR TO SUPPORTS WITH ENDS AND JOINTS STAGGERED. ORIENTED STRAND BOARD SUBSTITUTION IS ALLOWED EXCEPT FLOORS USE PLYWOOD IN ALL CASES. MAINTAIN SPECIFIED PANEL SPAN RATINGS AND THICKNESS.

31.00 FOUNDATIONS

1. FOUNDATIONS HAVE BEEN DESIGNED AND SHALL BE CONSTRUCTED IN ACCORDANCE WITH CRITERIA ESTABLISHED IN THE GEOTECHNICAL REPORT.

2. ALL FOUNDATIONS ARE TO BEAR ON MATERIAL HAVING AT LEAST THE ABOVE NOTED CAPACITY. ROCK-BEARING FOUNDATIONS ARE TO BE FOUNDED ON 100% COMPETENT ROCK. ALL EXTERIOR FOOTINGS SHALL BE A MINIMUM OF 3'-6" BELOW FINISHED GRADE.

3. * FOOTING ELEVATIONS HAVE BEEN ESTABLISHED FROM AVAILABLE INFORMATION. FOOTING BOTTOMS SHALL BE AT LEAST 6" BELOW ANY EARTH DISTURBED BY REMOVAL OF EXISTING CONSTRUCTION.

4. STEPS IN ALL FOOTINGS ARE NOT TO EXCEED 1'-0" VERTICAL FOR EACH 2'-0" HORIZONTAL.

5. DOWEL GRADE BEAMS TO CAISSONS WITH 4 #8 BARS. PROVIDE 2'-0" EMBEDMENT IN CAISSON AND EXTEND DOWEL TO TOP BARS OF GRADE BEAM.

6. WHERE GRADE BEAMS WITH DIFFERENT BOTTOM ELEVATIONS MEET AT A COMMON CAISSON, PROVIDE A CONCRETE PIER, SAME WIDTH AS GRADE BEAM X 12" LONG FROM TOP OF CAISSON TO BOTTOM OF HIGHER GRADE BEAM.

7. ALL FOUNDATION WALLS ARE TO BE CMU UNLESS NOTED OTHERWISE.

8. UNLESS NOTED OTHERWISE, ALL CONCRETE WALLS SHALL BE REINFORCED WITH #4 BARS @ 12 " OC, EACH WAY, EACH FACE.

9. DOWEL CONCRETE WALLS TO FOOTINGS WITH #4 @ 12 " DOWELS, UNO.

10. UNLESS NOTED OTHERWISE ALL WALL FOOTINGS ARE TO BE 12" THICK AND PROJECT 6" ON EACH SIDE OF THE WALL WITH A MINIMUM TOTAL WIDTH OF 2'-0". FOOTINGS ARE TO BE REINFORCED WITH 3-#4 CONTINUOUS BARS AND #4 CROSS TIES AT 4'-0" OC SECURELY WIRE TIED TO THE CONTINUOUS RODS

11. BACKFILL SHALL NOT BE PLACE AGAINST BASEMENT RETAINING WALLS UNTIL:

A. CONCRETE OR MASONRY GROUT HAS REACHED ITS SPECIFIED 28 DAY STRENGTH.
B. WOOD FLOOR FRAMING (INCLUDING DIAPHRAGM) REQUIRED TO STABILIZE WALLS IS COMPLETE AND FULLY NAILED AND ANCHORED.
C. STEEL FLOOR FRAMING (INCLUDING CONCRETE SLAB WITH 7-DAY CURE) REQUIRED TO STABILIZE WALLS IS COMPLETE AND FULLY ANCHORED.
D. BASEMENT SLAB (IF APPLICABLE) HAS BEEN INSTALLED AND CURED FOR 7 DAYS.

12. FOOTINGS AND SLAB-ON-GRADE CONCRETE SHALL NOT BE PLACED ON MUDDY OR FROZEN GROUND. SUB-GRADE FOR SLAB WHERE VAPOR BARRIER IS NOT REQUIRED SHALL BE DAMP AT TIME OF CONCRETE PLACEMENT.

13. IN NO CASE SHALL BULLDOZERS OR OTHER HEAVY EQUIPMENT BE PERMITTED CLOSER THAN 8 FEET FROM ANY FOUNDATION WALL. IF IT IS NECESSARY TO OPERATE SUCH EQUIPMENT CLOSER THAN 8 FEET TO THE WALL, THE CONTRACTOR SHALL BE THE SOLE RESPONSIBLE PARTY AND AT HIS OWN EXPENSE SHALL PROVIDE ADEQUATE SUPPORTS OR BRACE THE WALL TO WITHSTAND THE ADDITIONAL LOADS SUPERIMPOSED FROM SUCH EQUIPMENT.

14. NO CONCRETE FOUNDATION OR SLAB ON GRADE MAY BE PLACED UNTIL SUBGRADE FOR SAME HAS BEEN APPROVED BY THE GEOTECHNICAL ENGINEER.

06.17 SHOP FABRICATED STRUCTURAL WOOD TRUSSES

1. PREFABRICATED WOOD TRUSSES SHALL BE DESIGNED BY A REGISTERED PROFESSIONAL ENGINEER IN THE STATE OF THE PROJECT IN ACCORDANCE WITH THE LATEST EDITION OF THE "NATIONAL DESIGN SPECIFICATION FOR STRESS-GRADE LUMBER AND ITS FASTENINGS" AS RECOMMENDED BY THE NATIONAL FOREST PRODUCTS ASSOCIATION.

2. THE TRUSS MANUFACTURER SHALL SUBMIT THE FOLLOWING CERTIFICATIONS, SEALED BY THE ENGINEER RESPONSIBLE FOR THE DESIGN, FOR THE ARCHITECT'S APPROVAL PRIOR TO FABRICATION OF ANY MATERIALS.
A. CERTIFICATION BY AN INDEPENDENT AGENCY OF THE RATED LOAD CAPACITY OF THE CONNECTORS USED TO SECURE THE MEMBERS.
B. CERTIFICATION THAT THE MANUFACTURER IS LICENSED TO FABRICATE TRUSSES UTILIZING THE CONNECTOR SYSTEM PROPOSED.
C. CERTIFICATION THAT THE TRUSSES ARE DESIGNED TO MEET THE LOAD CRITERIA SPECIFIED HEREIN.
D. FABRICATION AND INSTALLATION DRAWINGS SHALL BE SUBMITTED TO THE CONTRACTOR FOR APPROVAL OF SIZE, SHAPE AND LAYOUT PRIOR TO FABRICATION OF MATERIALS.

3. TOP CHORDS ARE TO BE DESIGNED TO RESIST BENDING INDUCED BY THE ROOF DEAD LOAD AND LIVE LOAD.

4. DEFLECTIONS DUE TO LIVE LOAD SHALL BE LIMITED TO L/360. TOTAL LOAD DEFLECTIONS SHALL BE LIMITED TO L/240.

5. TRUSS MANUFACTURER SHALL DESIGN AND PROVIDE ALL ROOF TRUSS CONNECTIONS TO BEARING LOCATIONS AND OTHER TRUSS CONNECTIONS .

6. TRUSSES SHALL BE DESIGNED FOR THE FOLLOWING LOADING:
A. TOP CHORD LIVE LOAD: ROOF 40 PSF

B. TOP CHORD DEAD LOAD: ROOF 15 PSF

C. BOTTOM CHORD DEAD LOAD ALL TRUSS TYPES 5 PSF

D. MECHANICAL EQUIPMENT AS SHOWN ON PLANS.

8. TRUSS MANUFACTURER SHALL DESIGN AND PROVIDE ALL HEADERS AND SPECIAL TRUSSES REQUIRED TO SUPPORT ROOF TOP EQUIPMENT AND TO FRAME ROOF OPENINGS. CONNECTIONS BETWEEN HEADERS AND TRUSSES SHALL BE DESIGNED BY THE MANUFACTURER.

9. TRUSS MANUFACTURER SHALL DESIGN AND INDICATE LOCATIONS FOR ALL TEMPORARY AND PERMANENT (IF ANY) BRIDGING. GENERAL CONTRACTOR SHALL INSTALL ALL BRIDGING AS DIRECTED BY TRUSS MANUFACTURER.

WALL FOOTING SCHEDULE

MARK	WIDTH	THICKNESS	REINFORCING
WF2412	2' - 0"	1' - 0"	3- #4 BARS, #4 TIES @ 48" OC
WF3012	2' - 6"	1' - 0"	3- #4 BARS, #4 TIES @ 48" OC
WF3612	3' - 0"	1' - 0"	4- #4 BARS, #4 TIES @ 48" OC

LINTEL SCHEDULE

STEEL LINTELS TO HAVE 1" OF BEARING FOR EACH FOOT OF SPAN, WITH A MINIMUM OF 6" AND A MAXIMUM OF 12" AT EACH END. WHERE LINTELS ARE WITHIN 12" OF COLUMN, EXTEND THE LINTEL AND CLIP TO THE COLUMN. UNLESS NOTED OTHERWISE, THE FOLLOWING LINTELS ARE TO BE USED FOR THE CONDITIONS INDICATED.

MATERIAL TYPE	LINTEL, MINIMUM	MAX. CLEAR SPAN
4" MASONRY	L4x4x 5/16	4'-4"
4" MASONRY	L6x4x 5/16, LLV	7'-0"
6" MASONRY	6x8 PRECAST LINTEL, 2- #3 BOTTOM	4'-0"
6" MASONRY	6x8 PRECAST LINTEL, 2- #3 BOTTOM, 1- #3 TOP	6'-8"
6" MASONRY	WT5 x 13	6'-8"
8" MASONRY	(2) L5x 3.5x 5/16	6'-0"
8" MASONRY	(2) 4x8 PRECAST LINTEL, 1- #3 BOTTOM	4'-0"
8" MASONRY	(2) 4x8 PRECAST LINTEL, 1- #4 BOTTOM, 1- #3 TOP	6'-8"
8" MASONRY	8x8 PRECAST LINTEL, 2- #5 TOP AND BOTTOM	8'-0"
8" MASONRY	HSS4x8x1/4 W/ 1/4" PLATE, SEE DETAIL THIS SHEET	12'-0"

MARK	DESCRIPTION	REMARKS
L-1	(2) 4x8 PRECAST LINTEL, 1- #3 BOTTOM & 5/16" BENTPLATE, 7.5 x 5, LLH	
L-2		
L-3		

NOTES:
1.

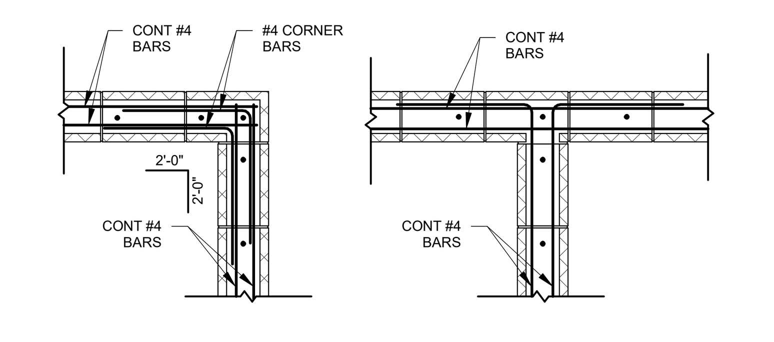

1 TYPICAL BOND BEAM CORNER AND INTERSECTION DETAIL
SCALE: 1/2" = 1'-0"

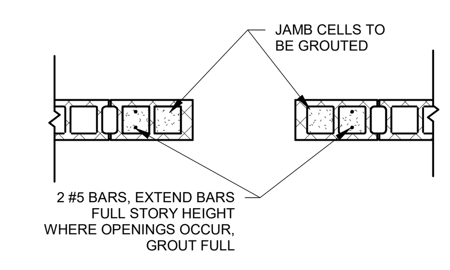

2 TYPICAL JAMB DETAIL
SCALE: 1/2" = 1'-0"

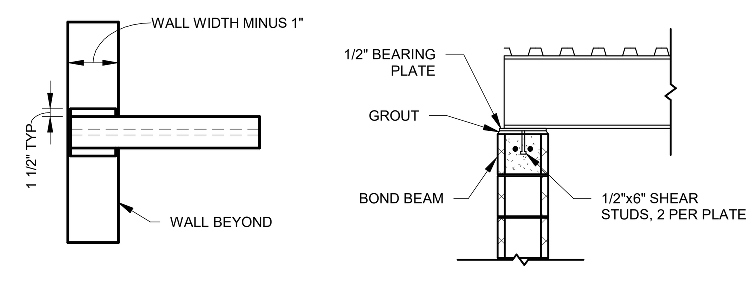

3 TYPICAL BEAM BEARING ON BLOCK WALL
SCALE: 1/2" = 1'-0"

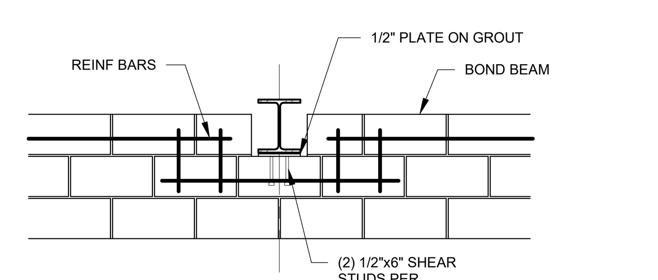

NOTE:
1. DETAIL IS SIMILAR WHERE WALLS SLOPES FOR ROOF PITCH

4 TYPICAL BOND BEAM INTERRUPTION DETAIL
SCALE: 1/2" = 1'-0"

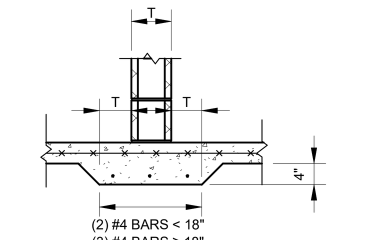

5 TYPICAL THICKENED SLAB DETAIL
SCALE: 1/2" = 1'-0"

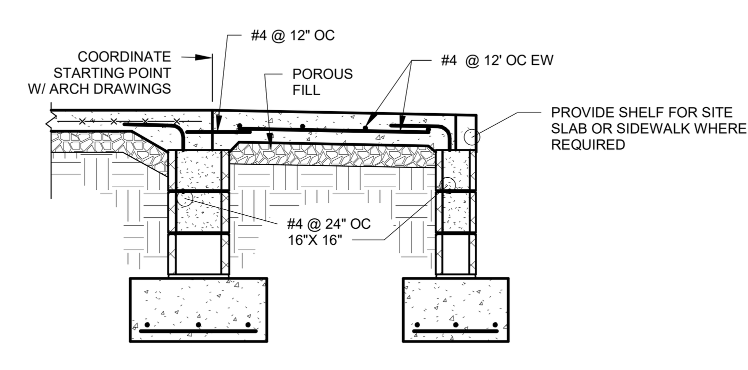

NOTE:
1. SLOPE SLAB AWAY FROM BUILDING AT 2% PITCH.

6 TYPICAL ENTRANCE SLAB DETAIL
SCALE: 1/2" = 1'-0"

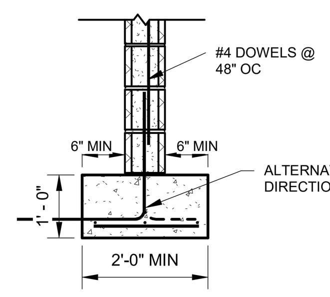

7 TYPICAL FOUNDATION WALL DETAIL
SCALE: 1/2" = 1'-0"

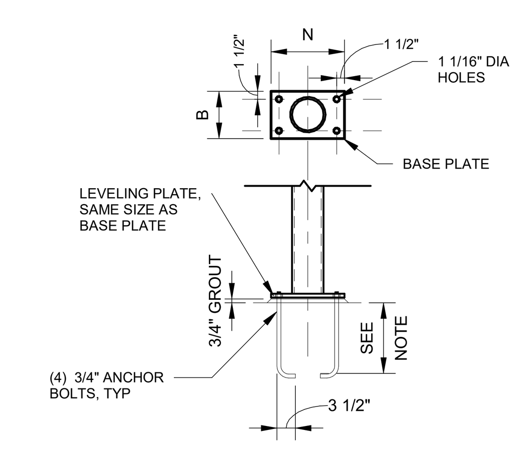

NOTE:
1. 9" WHERE COLUMN BEARS ON FOOTING, 16" WHERE COLUMN BEARS ON PIER.

8 TYPICAL COLUMN BASE DETAIL
SCALE: 1/2" = 1'-0"

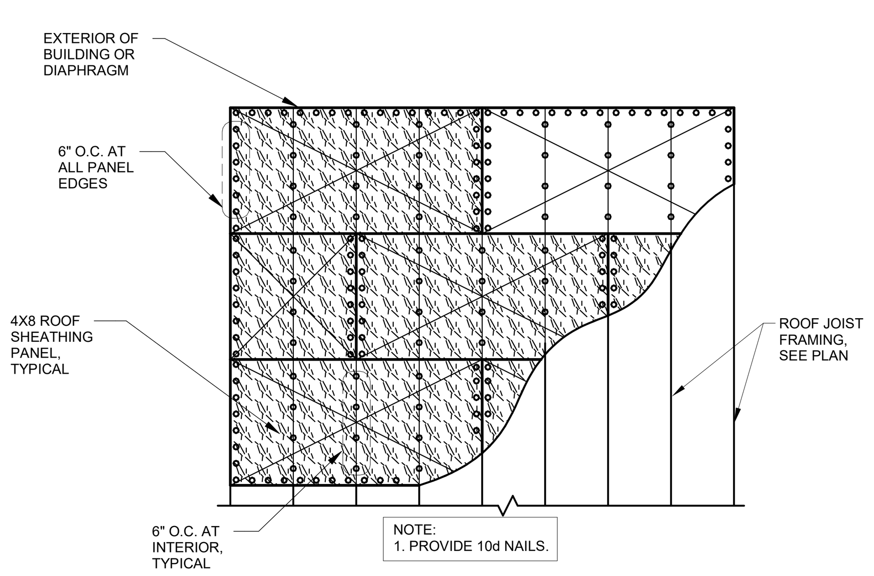

9 TYPICAL ROOF SHEATHING NAILING PATTERN
SCALE: 1/2" = 1'-0"

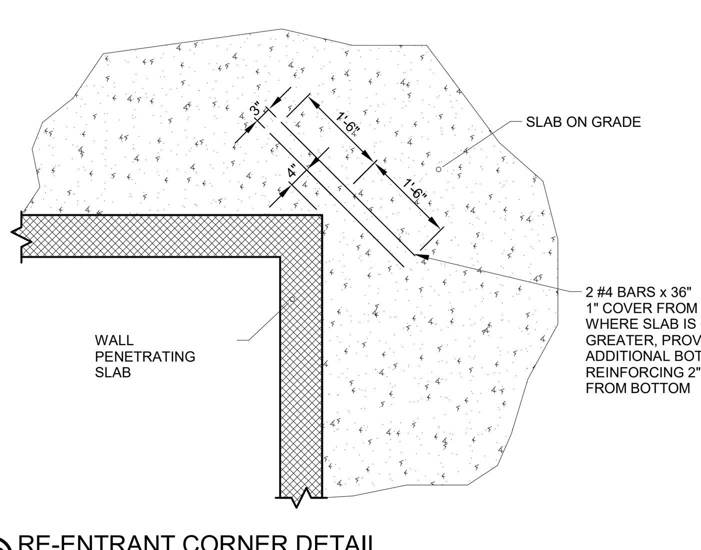

10 RE-ENTRANT CORNER DETAIL
SCALE: 1/2" = 1'-0"

FASTENING SCHEDULE

CONNECTION	FASTENING	LOCATION
1. JOIST TO SILL OR GIRDER	3 - 8d COMMON (2 1/2"x0.131") 3 - 3"x0.131" NAILS	TOENAIL
2. BRIDGING TO JOIST	2 - 8d COMMON (2 1/2"x0.131") 2 - 3"x0.131" NAILS	TOENAIL EACH END
3. SOLE PLATE TO JOIST OR BLOCKING SOLE PLATE TO JOIST OR BLOCKING AT BRACED WALL PANEL	16d (3 1/2"x0.135") AT 16" OC 3"x0.131" NAILS AT 8" OC 3 - 16d (3 1/2"x0.135") AT 16" OC 4 - 3"x0.131" NAILS AT 16" OC	TYPICAL FACE NAIL BRACED WALL PANELS
4. TOP PLATE TO STUD	2 - 16d COMMON (3 1/2"x0.162") 3 - 3"x0.131" NAILS	END NAIL
5. STUD TO SOLE PLATE	4 - 8d COMMON (2 1/2"x0.131") 4 - 3"x0.131" NAILS 2 - 16d COMMON (3 1/2"x0.162") 3 - 3"x0.131" NAILS	TOENAIL END NAIL
6. DOUBLE STUDS	16d (3 1/2"x0.135") AT 24" OC 3"x0.131" NAIL AT 8" OC	FACE NAIL
7. DOUBLE TOP PLATES DOUBLE TOP PLATES	16d (3 1/2"x0.135") AT 16" OC 3"x0.131" NAILS AT 12" OC 8 - 16d COMMON (3 1/2"x0.162") 12 - 3"x0.131" NAILS	TYPICAL FACE NAIL LAP SPLICE
8. BLOCKING BETWEEN JOISTS OR RAFTERS TO TOP PLATE	3 - 8d COMMON (2 1/2"x0.131") 3 - 3"x0.131" NAILS	TOENAIL
9. RIM JOIST TO TOP PLATE	8d (2 1/2"x0.131") AT 6" OC 3"x0.131" NAILS AT 6" OC	TOENAIL
10. TOP PLATES, LAPS, AND INTERSECTIONS	2 - 16d COMMON (3 1/2"x0.162") 3 - 3"x0.131" NAILS	FACE NAIL
11. CONTINUOUS HEADER, TWO PIECES	16d COMMON (3 1/2"x0.162")	16" OC ALONG EDGE
12. CONTINUOUS HEADER TO STUD	4 - 8d COMMON (2 1/2"x0.131")	TOENAIL
13. RAFTER TO PLATE	3 - 8d COMMON (2 1/2"x0.131") 3 - 3"x0.131" NAILS	TOENAIL
14. BUILT-UP CORNER STUDS	16d COMMON (3 1/2"x0.162") 3"x0.131" NAILS	24" OC 16" OC
15. BUILT-UP GIRDER AND BEAMS	20 COMMON (4"x0.192") AT 32" OC 3"x0.131" NAILS AT 24" OC 2 - 20d COMMON (4"x0.192") 3 - 3"x0.131" NAILS	FACE NAIL AT TOP AND BOTTOM STAGGERED ON OPPOSITE SIDES FACE NAIL AT ENDS AND AT EACH SPLICE
16. JOIST TO BAND JOISTS	3 - 16d COMMON (3 1/2"x0.162")	FACE NAIL
17. WALL PANEL TO WALL PANEL	2 - 16d @ 12" OC	FACE NAIL
18. BULKHEADS TO NEW AND EXISTING WOOD STRUCTURE	2 - #9x1 1/2" MIN. WOOD SCREWS IN EACH JOIST OR @ 2'-0" OC	--
19. BULKHEADS TO NEW AND EXISTING STEEL STRUCTURE	2 - #10 TEK SCREWS IN EACH JOIST OR @ 2'-0" OC	--

WMF
WEBER MURPHY FOX
ARCHITECTURE
INTERIORS
CONSTRUCTION MANAGEMENT
PLANNING & LANDSCAPE ARCHITECTURE
CLEVELAND
ERIE
STATE COLLEGE

ARCHITECT/LANDSCAPE
WEBER MURPHY FOX
3230 WEST LAKE ROAD
ERIE PA 16505
PHONE: 814-920-1926
E-MAIL: dwilkins@wmf-inc.com
www.wmf-inc.com

CIVIL
K&W
2201 N FRONT STREET, SUITE 200
HARRISBURG, PA 17110
PHONE: 717-635-2835
E-MAIL: msingley@kandwengineers.com
www.kandwengineers.com

MEP ENGINEERING
BARTON ASSOCIATES
SCC NORTH BUILDING, 221 W PHILADELPHIA ST.
YORK, PA 17401
PHONE: 717-817-2285
E-MAIL: ras@ba-inc.com
www.ba-inc.com

STRUCTURAL
DIVINEY & ASSOCIATES
310 PENN STREET, SUITE 104
HOLLIDAYSBURG, PA 16648
PHONE: 814-317-5037
E-MAIL: rdiviney@DAStructures.com
dastructures.com

COMMONWEALTH OF PENNSYLVANIA
REGISTERED PROFESSIONAL
RANDAL S. DIVINEY
ENGINEER
PE-049201E

MARK	DATE	DESCRIPTION
	01-22-2024	BID SET
	12-06-2023	REVISED DRAWINGS
	10-04-2023	BID SET
	09-27-2023	PERMIT SET
	09-06-2023	CD SUBMISSION

KEY PLAN:

NORTH

PROJECT TITLE:

PENNSTATE Harrisburg

STADIUM SEATING & RESTROOMS BLDG

PENN STATE UNIVERSITY HARRISBURG CAMPUS
777 W Harrisburg Pike, Middletown, PA 17057

PSU BUILDING NUMBER: 0985095
PSU PROJECT NUMBER: 00-08713.00
PROJECT NUMBER: 2022.138.00
PROJECT PHASE: CONSTRUCTION DOCUMENTS

GENERAL NOTES AND TYPICAL DETAILS

DRAWN BY: DLD
CHECKED BY: RSD
COPYRIGHT © WEBER MURPHY FOX INC. 2022
DRAWING NO.
S001

SHEET FILE/PLOT DATE: 3/21/2024 12:32:50 PM C:\DASE Projects\3020-14\CAD\Structural\Trusses\PSUH Stadium Seating and Restroom Bldg\-STR.rvt