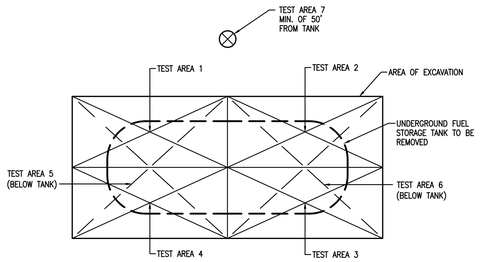

PLAN
NO SCALE

NOTES:

1. THE EXCAVATED SOIL SHALL BE PLACED IN SIX (6) SEPERATE AREAS IN ACCORDANCE WITH THE INDICATED TEST AREAS, FOR POSSIBLE LATER TESTING.
2. REMOVE AND DISPOSE OF EXISTING FUEL TANK AND PIPING IN ACCORDANCE WITH ALL CURRENT STATE, LOCAL AND D.E.P. CODES AND REGULATIONS. REMAINING CONTENTS OF TANK SHALL BE REMOVED BY THE CONTRACTOR.
3. THE CONTRACTOR SHALL INCLUDE UNIT PRICES FOR:
   A. THE REMOVAL OF CONTAMINATED SOIL (PER. CU.YD.)
   B. THE COST PER TEST FOR ADDITIONAL SOIL TESTING AS REQUIRED BY D.E.P. FOR SIGNIFICANT GROUNDWATER OR SOIL CONTAMINATION.
4. THE CONTRACTOR SHALL INCLUDE IN THE BASE BID ONE (1) SAMPLE PROBE AND TEST FOR EACH EXCAVATED AREA AND ONE (1) SAMPLE PROBE AND TEST TO BE TAKEN 50' FROM EXCAVATION AREA.
5. REPORT ALL TESTS IN MG/KG, EACH TEST SHALL BE IN ACCORDANCE WITH LATEST D.E.P. REGULATIONS AND INCLUDE:
   A. TOTAL PETROLEUM HYDROCARBONS
   B. BENZENE
   C. ETHYL BENZENE
   D. TOLUENE
   E. XYLENES
6. THE CONTRACTOR SHALL REMOVE ALL OIL, SLUDGE, AND EXISTING TANK CONTENTS IN ACCORDANCE WITH LATEST D.E.P. REGULATIONS.

4 FUEL TANK EXCAVATION DETAIL
NO SCALE

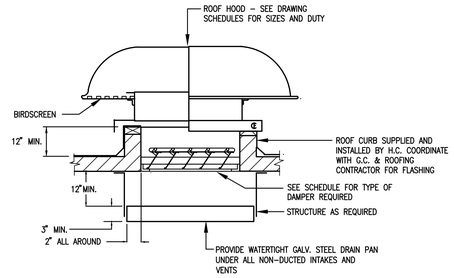

1 ROOF VENT / INTAKE DETAIL
NO SCALE

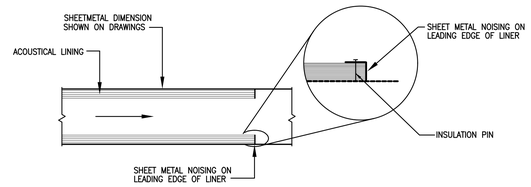

2 TYPICAL DUCT LINER DETAIL
NO SCALE

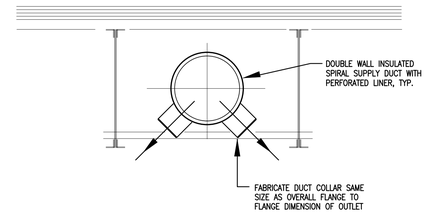

NOTE: INSTALL AUXILIARY GYM DIFFUSERS AT A 15° DOWNWARD ANGLE BELOW CENTERLINE OF DUCT MAIN.

3 TYPICAL GYM & AUX. GYM DIFFUSER DETAIL
NO SCALE

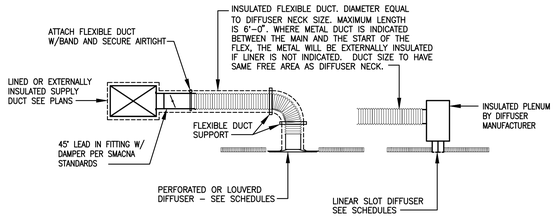

5 TYPICAL DIFFUSER CONNECTIONS
NO SCALE

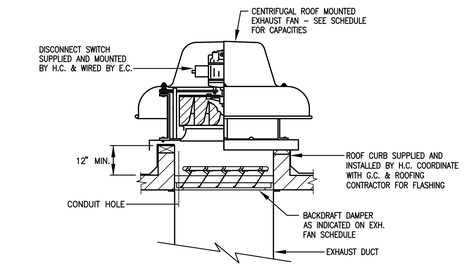

NOTE:
REFER TO EXHAUST FAN SCHEDULE, WHERE B.D.D. IS INDICATED THE DAMPER IS TO BE PROVIDED BY THE FAN MANUFACTURER.

6 DIRECT DRIVE ROOF MOUNTED EXHAUST FAN DETAIL
NO SCALE

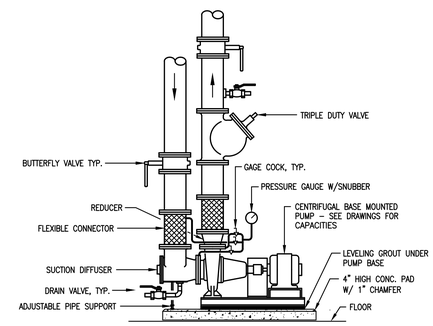

7 BASE MOUNTED PUMP DETAIL
NO SCALE

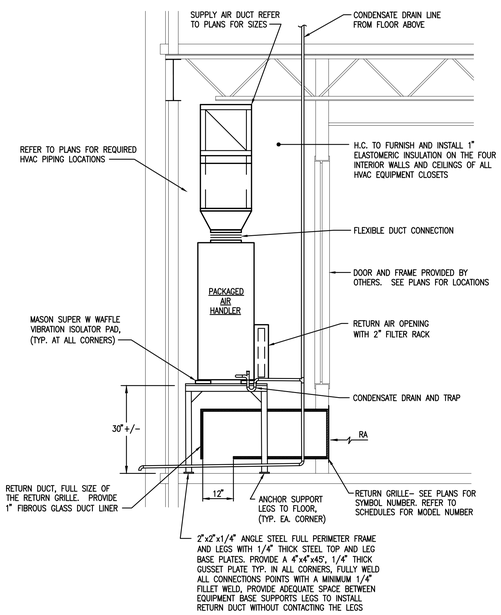

11 TYPICAL VERTICAL PAH CONFIGURATION DETAIL
NO SCALE

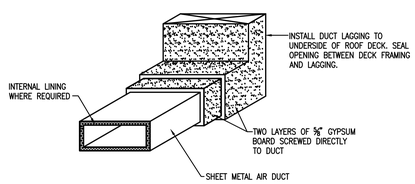

8 TYPICAL DUCT LAGGING DETAIL
NO SCALE

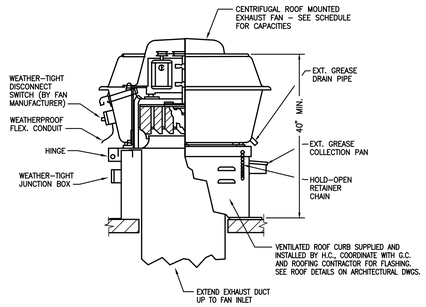

9 KITCHEN HOOD EXHAUST FAN DETAIL
NO SCALE

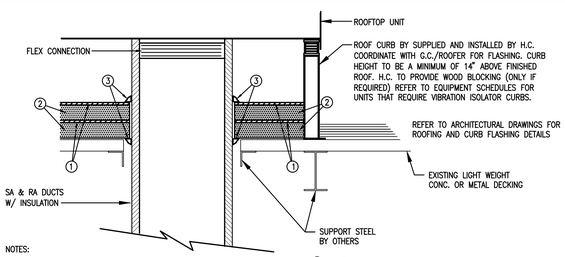

NOTES:

1. H.C. TO VERIFY OPENING IN THE METAL DECK IS A MAXIMUM OF 1" LARGER THAN EACH DUCT PENETRATION.
2. THE H.C. SHALL FURNISH AND INSTALL THE ACOUSTICAL PACKAGE FOR THE ROOFTOP DUCTWORK PENETRATIONS.
3. THIS DETAIL APPLIES TO ALL AIR HANDLING UNTS (TAGGED AHU), ALL ENERGY RECOVERY UNITS (TAGGED ERU) AND ALL ROOFTOP UNITS (TAGGED RTU), WITH EXCEPTION OF RTU-1, REFER TO ROOF PLAN H-12 FOR RTU-1 INSTALLATION REQUIREMENTS.

① 1/2" CONCRETE WONDER BOARD INSTALLED WITHIN THE ENTIRE AREA OF THE ROOF CURB.

② 6" FIBERGLASS BATT INSULATION INSTALLED WITHIN THE ENTIRE AREA OF THE ROOF CURB.

③ STANDARD GRADE CAULK. APPLY AROUND THE ENTIRE DUCT PERIMETER.

10 TYPICAL ROOFTOP UNIT INSTALLTION DETAIL
NO SCALE

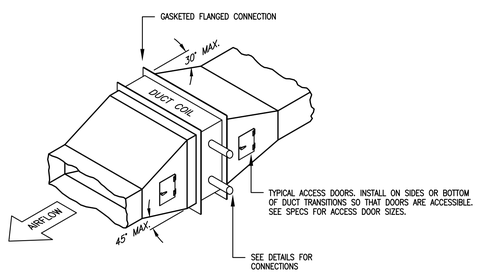

12 DUCT COIL CONNECTION DETAIL
NO SCALE

13 .
.

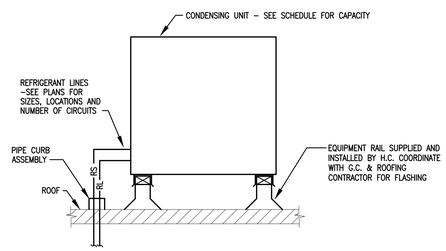

14 CONDENSING UNIT MOUNTING DETAIL
NO SCALE

CONSOLIDATED ENGINEERS
1022 James Drive
Leesport, PA 19533
Tel 610-916-1600 Fax 610-916-1610
Internet www.consolidatedengineers.com

COMMONWEALTH OF PENNSYLVANIA
REGISTERED PROFESSIONAL
ADAM NICHOLAS MOSER
ENGINEER
No. PE074301

AEM ARCHITECTS INC.
3700 PERKIOMEN AVENUE, READING, PA 19606-2795
Phone: 610.779.3220 Fax: 610.779.9022
www.aem-arch.com

HVAC DETAILS - SHEET 2

RENOVATIONS TO THE COCALICO MIDDLE SCHOOL
COCALICO SCHOOL DISTRICT
SOUTH 4TH STREET, DENVER BOROUGH, LANCASTER COUNTY PA

All DIMENSIONS and EXISTING CONDITIONS shall be CHECKED and VERIFIED by the CONTRACTOR at the SITE.

JOB NO.:	23001.00
DRAWN BY:	RLC
DATE:	04.12.24

H-5